CRYSTEEL'S LO-BOY

LB545 & LB645

TRUCK HOIST

OWNERS MANUAL

P.O. Box 178
52182 Ember Road
Lake Crystal, MN 56055

www.crysteel.com
crysteel@crysteel.com
(507) 726−2728 (800) 533−0494

1902 Route 57 South
Fulton, NY 13069

DATE PURCHASED _____

BODY SERIAL NUMBER _____

HOIST SERIAL NUMBER _____

CYLINDER SERIAL NUMBER _____

DEALER _____

ADDRESS _____

PHONE _____

FOREWORD

Crysteel's LoBoy Model 545 and 645 hoists have been designed for use on single–axle trucks with cab–to–axle dimensions of 84 to 126 inches and body lengths of 12 through 18 feet. Bodies normally used with these hoists are grain bodies and platforms. This manual contains the information needed for the proper installation and operation of these hoists.

These instructions are for installing and using Crysteel's LoBoy Model 545 and 645 hoists. With proper installation, use, and regular maintenance, these hoists will give many years of trouble free service.

When ordering parts, be sure to give serial number of hoist, pump, and cylinder. The serial number of the pump is found on the plate on the pump. The serial number of the cylinder is stamped on the barrel of the cylinder near the base. For future reference, copy these numbers NOW in the space provided above. Order parts by number and description as given in the parts listing in this manual.

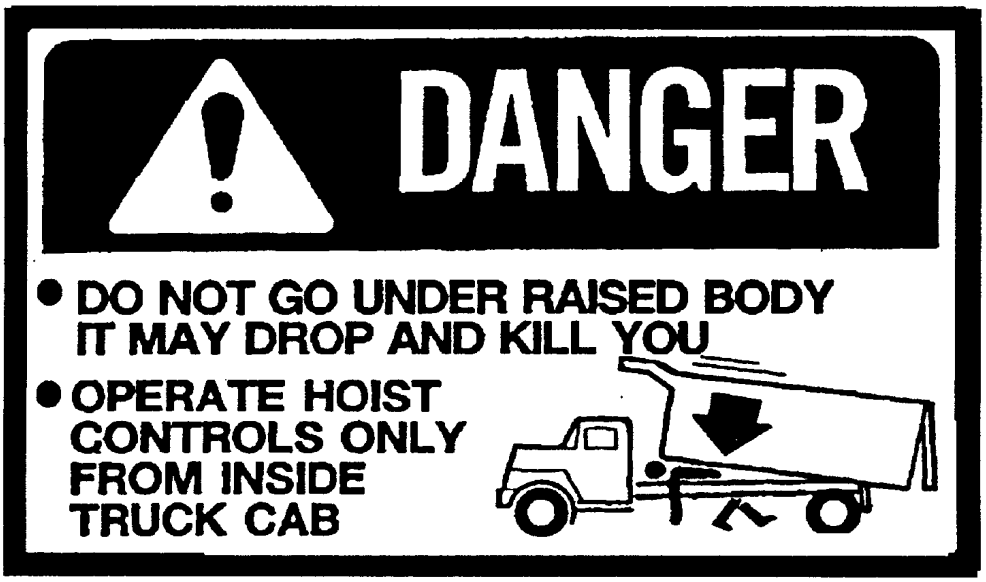

OPERATION AND USE

1. Engage PTO from cab and adjust engine speed to fast idle.
2. The hoist should raise when the hoist control lever is pulled back, hold when the lever is in the center detent, and lower when the lever is pushed forward.
3. To raise the hoist, pull the control lever back. To hold the body in a raised position, place the control lever in its center detent position. To lower the hoist, push the control lever forward.
4. ALWAYS return the hoist control lever to its center detent position after each use.
5. DO NOT LEAVE THE PTO IN GEAR WHILE TRANSPORTING. THIS CAN CAUSE SEVERE DAMAGE TO THE PTO OR HYDRAULIC PUMP.
6. To raise the body prop, raise the body, shut off all power, raise the prop arm to a free standing position. Lower the body slowly until the body prop bracket contacts the prop arm saddle.
7. To lower the body prop, raise the body, lower the prop arm to its storage position. Lower the body.
8. The hydraulic system should be drained, flushed and refilled with proper hydraulic fluid at regular intervals. CAUTION: NEVER use hydraulic BRAKE FLUID in the hydraulic system.

SOME DO'S AND DON'TS FOR SAFE AND LONG SERVICE

1. Use the proper hydraulic fluid. KEEP IT CLEAN. Remember to change it regularly.
2. Lubricate all grease fittings at regular intervals.
3. ALWAYS carefully block up the body, using the body prop, before working under it.
4. Do not "race" the engine when unloading.
5. Do not load the hoist beyond its capacity.
6. DO NOT tamper with the hydraulic relief valve. This will void the warranty. It can cause severe damage to the hoist and cylinder.
7. Never leave the PTO in gear while transporting. It could ruin the hydraulic pump, the PTO or the transmission.
8. Check all bolts and fittings regularly. Keep them tight. See table on page 4 for torque values.

TABLE OF CONTENTS

INSTALLATION INSTRUCTIONS

GENERAL INFORMATION

It is a good idea to look through these installation instructions before beginning to mount the hoist and hydraulic system.

When welding, protect the truck's electrical, air and brake systems by disconnecting, removing or covering. Tighten all nuts and bolts to a consistent level. Use the following table for torque values.

Size	Grade 2 Torque	Grade 5 Torque	Grade 8 Torque
1/4−20	3−4 lb−ft	6−7 lb−ft	10−11 lb−ft
1/4−28	4−5 lb−ft	8−9 lb−ft	11−12 lb−ft
5/16−18	8−9 lb−ft	14−15 lb−ft	21−22 lb−ft
5/16−24	9−10 lb−ft	15−16 lb−ft	21−22 lb−ft
3/8−16	17−18 lb−ft	24−26 lb−ft	37−40 lb−ft
3/8−24	19−20 lb−ft	28−30 lb−ft	40−43 lb−ft
1/2−13	38−42 lb−ft	60−65 lb−ft	90−100 lb−ft
1/2−20	43−47 lb−ft	70−75 lb−ft	95−105 lb−ft
5/8−11	75−80 lb−ft	122−130 lb−ft	180−190 lb−ft
5/8−18	85−90 lb−ft	145−150 lb−ft	200−210 lb−ft
3/4−10	132−140 lb−ft	220−230 lb−ft	315−330 lb−ft
3/4−16	152−160 lb−ft	250−260 lb−ft	355−370 lb−ft

LOCATE AND INSTALL REAR HINGE

The rear hinge must be located as close as possible behind the rear spring hanger. This will be 32 to 36 inches behind the center of the rear axle on single−axle trucks. Mark the rear of the truck frame for notching as shown. Notch the truck frame as marked. Make sure the rear hinge is square with the truck frame and at the correct height. The top surface of the rear hinge bracket should be flush with the top of the angle mounting brackets of the hoist frame. Securely weld the rear hinge to the truck frame. Make two gusset plates to cap the end of the truck frame under the rear hinge. Weld them to the ends of the truck frame and to the bottom side of the rear hinge angle.

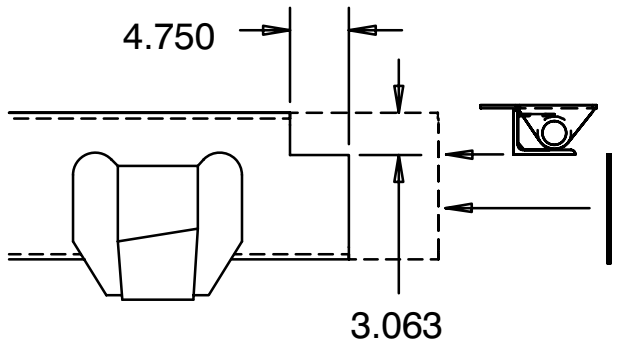

Fig. 1

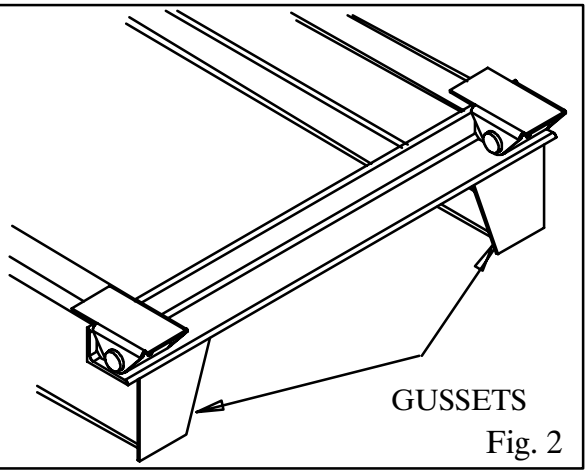

Fig. 2

LOCATE HOIST FRAME – STANDARD MOUNT

Determine where to mount the hoist on the truck frame. The stepped end of the hoist frame is designed to rest on a truck frame crossmember. Normally this is the crossmember supporting the spring shackle just ahead of the rear axle. See Figure 3. The top of this crossmember may be up to 1 inch below the top of the truck frame. If it is lower, install a spacer on the crossmember. *There must be at least 1/2 inch of horizontal clearance between the hoist and the crossmember.* Please refer to the chart in Figure 3 for the relationship between dump angle and "D" dimension. Measure forward from the center of the rear hinge pin and mark, on the truck frame, the location of the front crosstube of the hoist frame.

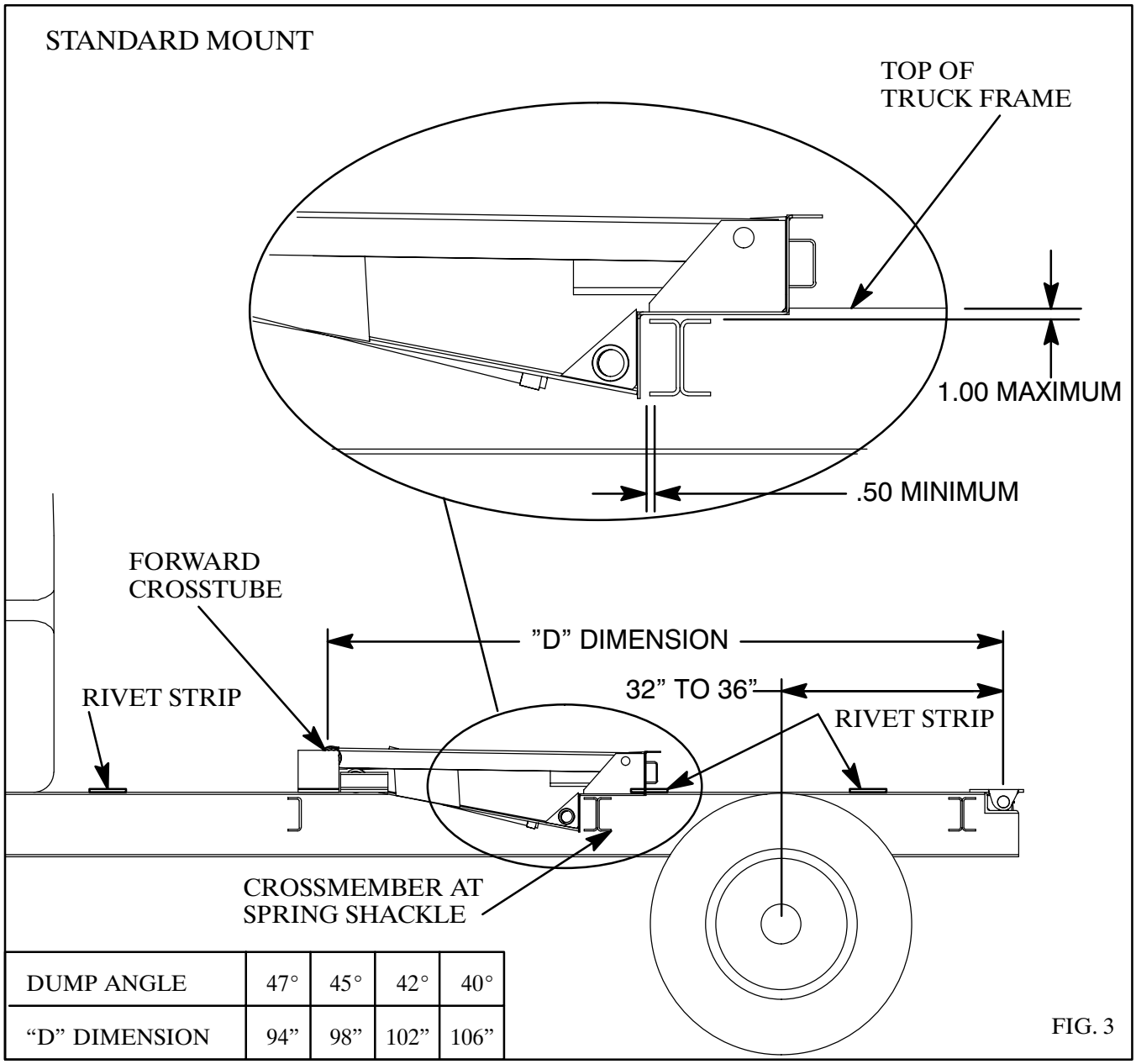

DUMP ANGLE	47°	45°	42°	40°
"D" DIMENSION	94"	98"	102"	106"

FIG. 3

LOCATE HOIST FRAME – REVERSE MOUNT

If desired, the hoist can be turned around so the stepped end of the hoist is toward the cab. See Figure 4. When this is done, the top of the crossmember supporting the end of the hoist should be no more than 1/2 inch below the top of the truck frame. *There must be at least 1/2 inch of horizontal clearance between the hoist and the crossmember.* The mounting distance, the "D" dimension, is measured from the center of the rear hinge to the forward crosstube of the hoist frame. Measure forward from the center of the rear hinge pin and mark, on the truck frame, the location of the front crosstube of the hoist frame.

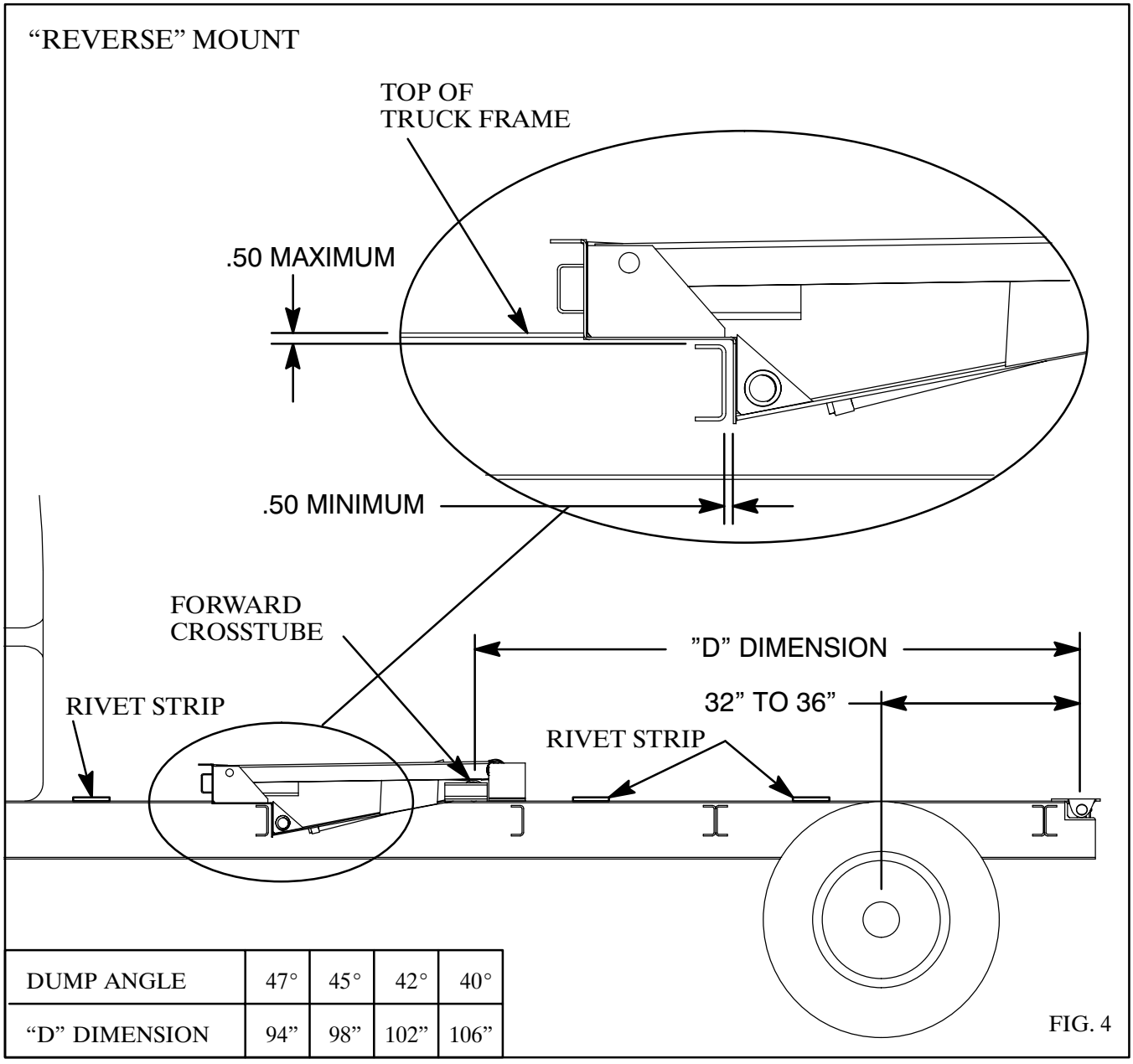

DUMP ANGLE	47°	45°	42°	40°
"D" DIMENSION	94"	98"	102"	106"

FIG. 4

Place the hoist on the truck frame and clamp the hoist pivot pads to the truck frame. If the center hinge end of the hoist is too high, relocate the hoist. If the center hinge end of the hoist is too low, install spacers (not supplied) on the crossmember in the truck frame under the hoist. Make sure the hoist frame is centered on and square with the truck frame.

MOUNT HOIST FRAME

The hoist pivot pads must rest flat on the truck frame. If the hoist pivot pads sit on rivet heads in the truck frame, either move the hoist or drill holes in the pivot pads to clear the rivets. Clamp a hoist mounting angle to the lower hoist pivot pad and to the outside of the truck frame (one on each side) and mark the truck frame for drilling. See Figure 5. Repeat for the other side.

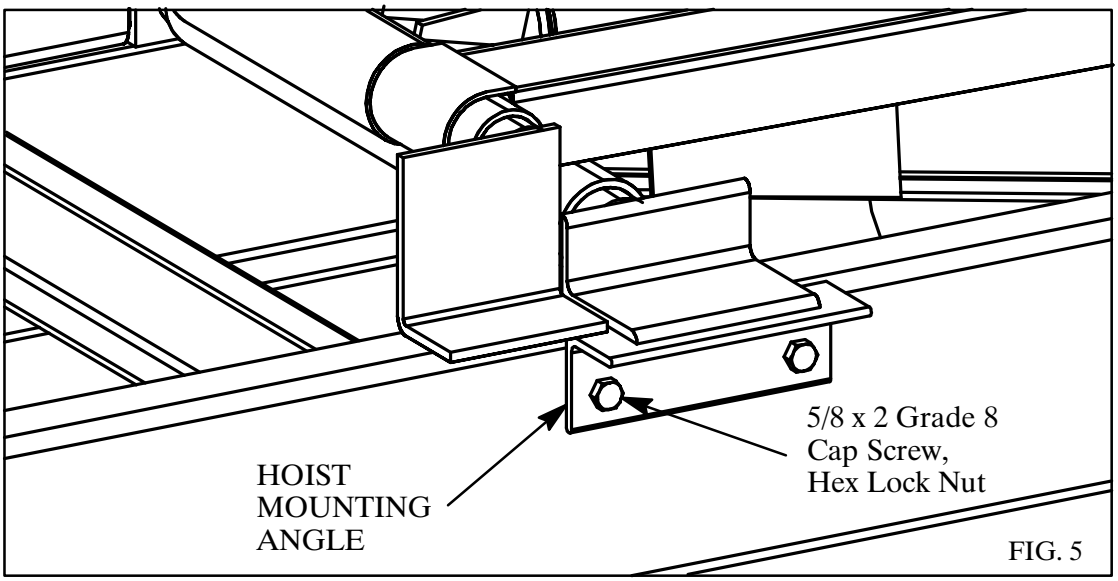

FIG. 5

CAUTION: BE CAREFUL OF BRAKELINES, WIRING, ETC. INSIDE THE TRUCK FRAME WHEN DRILLING THE TRUCK FRAME.

Drill 21/32 diameter holes in the truck frame using the hoist mounting angles as guides. Bolt the mounting angles to the truck frame using 5/8 x 2 hex bolts and hex lock nuts, tightening to 180 to 190 lb−ft. Securely weld the lower hoist pivot pads to the mounting angles. ***DO NOT WELD THE HOIST PIVOT PADS TO THE TRUCK FRAME!*** Remove the clamps.

HYDRAULIC SYSTEMS

Crysteel offers three different hydraulic systems for use with the Model 545 and 645 LoBoy hoists. Mounting instructions can be found on the pages shown:

MOUNT GEAR PUMP

The gear pump has an SAE ‘B’ mounting configuration, a 13 tooth splined shaft and a four−bolt mounting flange, and is assembled for rotation in either direction. NOTE: This pump will mount directly to Chelsea’s output type ‘XK’ or Muncie’s output type ‘D’. Crysteel Manufacturing recommends a PTO ratio of 100−120%. This assures a minimum pump operating speed of 600 RPM. Bolt the gear pump to the PTO output flange using 1/2 x 1 1/4 cap screws and lock washers.

MOUNT RESERVOIR/VALVE ASSEMBLY

The reservoir/valve assembly should be mounted on the same side of the truck as the pump with the exposed end of the valve spool toward the front. Bolt the mounting angles to the reservoir/valve assembly using 3/8 x 1 cap screws, flat washers and hex lock nuts, tightening to 24 to 26 lb−ft. Place the reservoir/valve assembly inside the truck frame and raise it as high as possible. See Figure 5. (There is no drive line to align and the reservoir should be higher than the pump for reliable performance.) Make sure there is enough clearance for the drive line and hot exhaust pipes. ***THE ENGINE EXHAUST MUST NEVER BLOW DIRECTLY ONTO THE RESERVOIR/VALVE ASSEMBLY.*** Clamp the mounting angles to the truck frame and mark the truck frame for drilling using the pump mounting angles as guides.

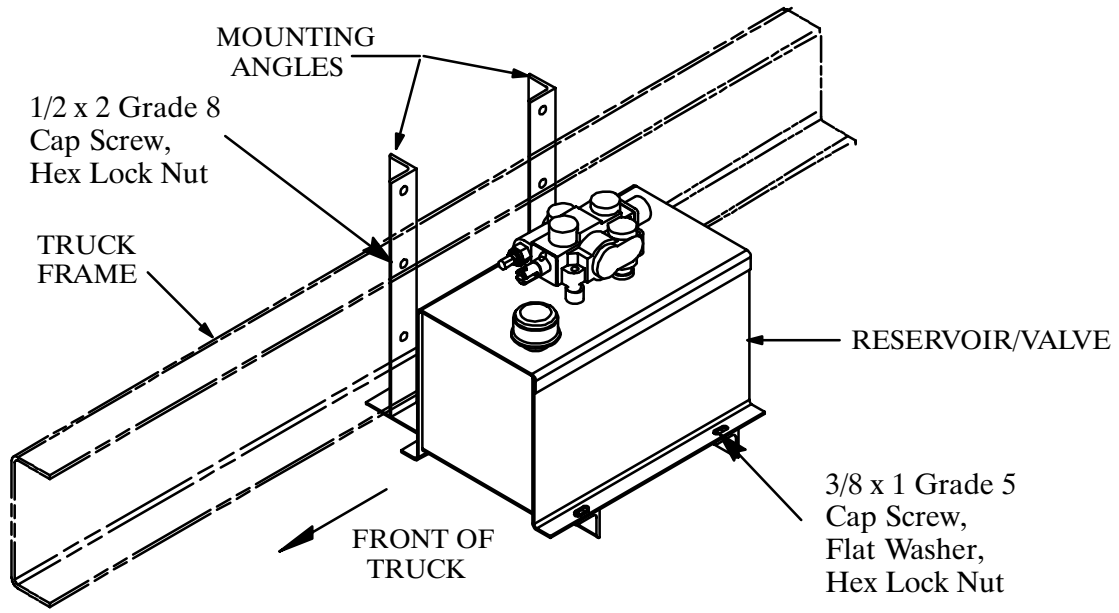

FIG. 6

CAUTION: BE CAREFUL OF BRAKELINES, WIRING, ETC. INSIDE THE TRUCK FRAME WHEN DRILLING THE TRUCK FRAME.

Drill 17/32” holes in the truck frame and bolt the reservoir/valve assembly in place using 1/2 x 2 cap screws and hex lock nuts, tightening to 90 to 100 lb−ft.

INSTALL HOIST CONTROL

Mount the Hoist Control decal on the pedestal taking care to align the holes for the PTO cable and indicator light. Temporarily assemble the valve control head to the pedestal using 5/16 x 2 1/2 machine screws and hex nuts. Place this assembly on the floor of the cab. The pedestal and valve control should angle forward. This makes it convenient for the operator to pull the hoist control lever back to raise the hoist. Make sure there is enough room to operate the valve control and gear shift lever and to adjust the seat. Check below the floor for obstructions and cable routing. Relocate the valve control if necessary. Mark the floor using the pedestal as a template and drill 11/32” holes for the mounting screws and a 3/4” hole for the control cable. Assemble the control cable to the valve control head and assemble the valve control head and cover to the pedestal using 5/16 x 2 1/2 machine screws and hex lock nuts. Insert the control cable through the hole in the floor and mount the pedestal to the floor using 5/16 x 1/2 hex head cap screws, clamping plate (under the floor) and hex lock nuts. Make sure the valve control lever is in its center detent position. Keep the control cable away from hot exhaust pipes and rotating drive shafts. The control cable should not have any sharp bends or kinks in it (these will make the control harder to operate).

Install the 3/4” hex jam nut onto the valve end of the control cable and turn it past the threads. Insert the end of the cable through the bonnet clamp. Install the bonnet onto the control cable and turn it past the threads also. Install the 1/4” hex jam nut and terminal eye on the core rod of the cable; lock the terminal eye to the core rod of the cable using the hex jam nut. Place the terminal eye in the slot of the valve spool; insert the short pin through the valve spool and terminal eye and secure it in place with the ‘E’ ring. Thread the bonnet onto the end of the cable so it firmly touches the end of the valve. (Do not over− or under−tighten the bonnet as either would move the valve spool out of its neutral position.) Remove two cap screws from opposite corners of the seal retainer plate. Slide the bonnet clamp onto the bonnet and secure it to the valve using the 1/4 x 1 1/4 cap screws, lock washers and flat washers. Lock the bonnet to the cable using the 3/4” hex jam nut. (See Fig. 6.)

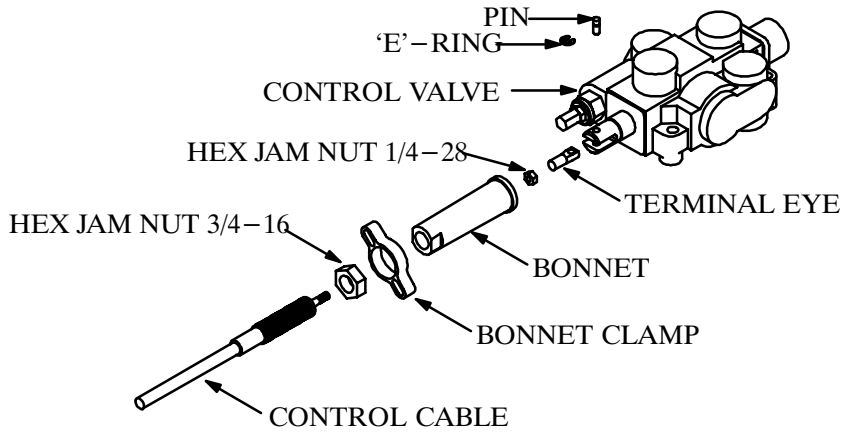

FIG. 7

INSTALL HOSES

Study Fig. 8 very carefully before connecting the hoses. Install a 3/4” 90° street elbow and a 3/4” hose barb in the suction port on the bottom of the reservoir. Install a 3/4” hose barb in the suction port of the pump and install the suction hose. Secure the suction hose in place using hose clamps. Install a 90° swivel adapter in the ‘IN’ port of the control valve and install a 3/4 x 1/2 hex reducer in the pressure port of the pump. Install a 72” long 1/2” hose from the pump to the valve.

Remove the plugs from the cylinder ports. Install a 3/8” coupling on each street elbow on the inside of the upper channels of the hoist frame. Connect 18” hoses from the couplings to the cylinder ports as shown in Fig. 7. Note that each hose crosses over to the opposite side of the cylinder. The swivel end of the hoses connects to the cylinder port. The head port can be connected loosely and tightened later when the hoist is raised.

Install 90° swivel adapters in the work ports of the control valve. Connect the shorter 3/8” hose to the hydraulic line assembly in the hoist frame on the same side of the truck as the reservoir/valve assembly. Connect the longer 3/8” hose to the other side. Connect the hose that is connected to the base end port of the cylinder to the ‘B’ port on the control valve. Connect the other 3/8” hose to the ‘A’ port. This will raise the hoist when the control lever is pulled back and lower it when pushed forward.

NOTE: The ‘A’ port is the ‘power−down’ port and has a pressure of only 500−1000 PSI; the ‘B’ port has full system pressure.

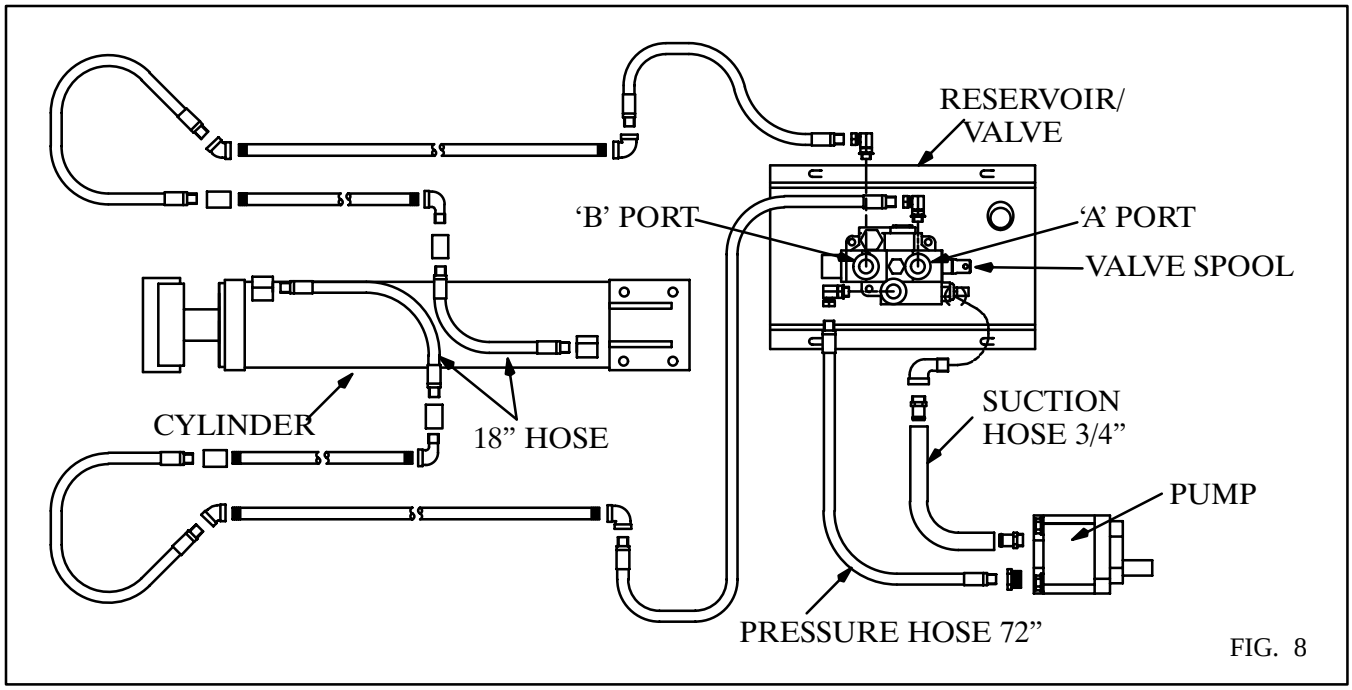

FIG. 8

ADD HYDRAULIC OIL

Use a quality hydraulic fluid of 150 SSU @ 100°F which contains corrosion and oxidation inhibitors and a foam depressant. This is approximately the equivalent of SAE 10W or lighter weight oil. Initially fill the reservoir with 4 gallons of hydraulic fluid. DO NOT OVERFILL THE RESERVOIR!

KEEP THE OIL CLEAN! USE CLEAN CONTAINERS, FUNNELS AND OTHER EQUIPMENT!

With normal use and working conditions the hydraulic oil should be changed annually. The breather cap should be cleaned every time the hydraulic oil is changed. With heavy use or very dusty working conditions the hydraulic oil should be changed more often.

NOTE: If the pump does not pump oil, pressurize the reservoir and engage the pump with the engine at slow idle. Once the pump is working, release the pressure and install the breather cap.

ELECTRIC PUMP MOUNTING – GENERAL

The electric power unit should be mounted close behind the cab, either inside or outside the truck frame. After determining where to mount the power unit, bolt one mounting angle to the power unit using the 3/8 x 1 hex head cap screws, tightening to 24 to 26 lb−ft. Clamp the mounting bracket to the truck frame. Clamp the second mounting angle to the truck frame so it supports the far end of the reservoir. Mark the truck frame for drilling using the pump mounting angles as guides.

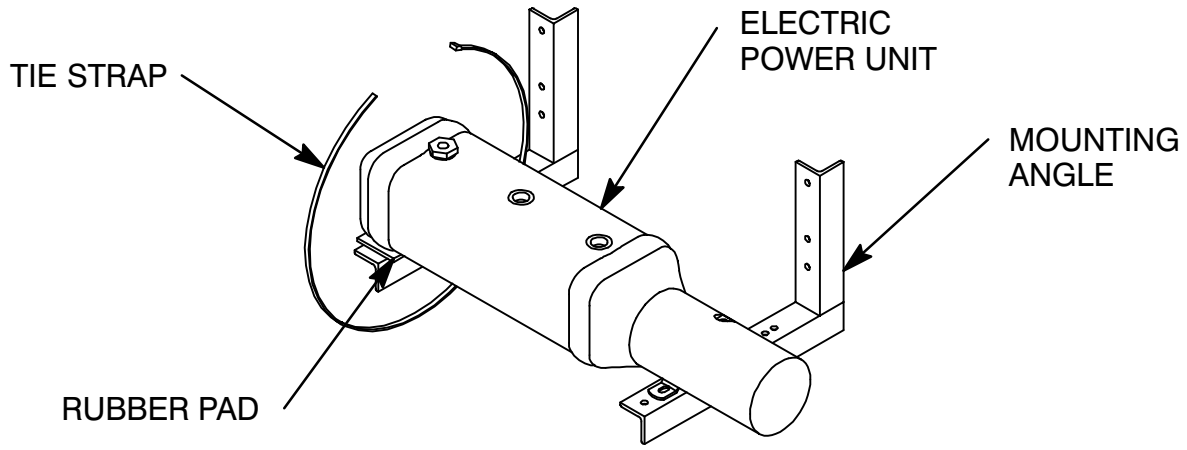

FIG. 9

CAUTION: BE CAREFUL OF BRAKELINES, WIRING, ETC. INSIDE THE TRUCK FRAME WHEN DRILLING THE TRUCK FRAME.

Drill 17/32” holes in the truck frame and bolt the reservoir/valve assembly in place using 1/2 x 2 cap screws and hex lock nuts, tightening to 90 to 100 lb−ft.

Connect the large terminal on the motor start solenoid to the positive terminal on the battery with a #0 gauge battery cable. Connect the negative terminal on the battery to one of the mounting screws on the power unit using a #0 gauge battery cable, or equivalent size ground strap.

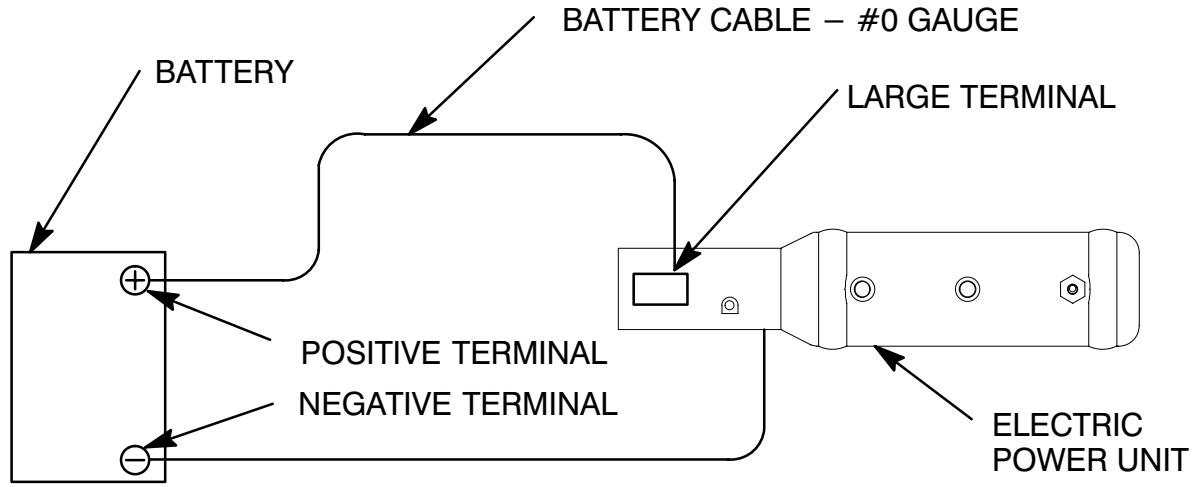

FIG. 10

Locate the push–button control in the cab and route the cable out of the cab through a hole in the back of the cab. Connect the push–button control to the electric power unit using the 3–pin connector set.

ELECTRIC PUMP INSTALLATION − SINGLE−ACTING

Install a 3/8 NPT x 3/4−16 JIC male elbow in the power port on the electric pump and install a 1/4 NPT x 3/4−16 JIC male elbow in the port on the top of the reservoir.

Connect the shorter 3/8" hose to the hydraulic line assembly in the hoist frame on the same side of the truck as the electric pump. Connect the longer 3/8" hose to the other side. Connect the hose that is connected to the base end port of the cylinder to the power port on the electric pump. Connect the other 3/8" hose to the port on the reservoir.

ELECTRIC PUMP INSTALLATION − DOUBLE−ACTING

Install 9/16 ORB x 3/4 JIC 90° swivel adapters in both work ports on the electric pump. If needed, for good hose routing, install 3/4 JIC x 3/4 JIC 90° swivel adapters to both of these adapters. Connect the shorter 3/8 ID hose with 3/4 JIC fittings from the 'C1' port on the pump to the base end port on the cylinder. Connect the longer 3/8" ID hose with 3/4 JIC fittings from the 'C2' port to the rod end port.

Connect the shorter 3/8" hose to the hydraulic line assembly in the hoist frame on the same side of the truck as the electric pump. Connect the longer 3/8" hose to the other side. Connect the hose that is connected to the base end port of the cylinder to the 'C1' port on the electric pump. Connect the other 3/8" hose to the 'C2' port.

NOTE: The 'C2' port is the power down port and has only 500 PSI maximum pressure.

ADD AUTOMATIC TRANSMISSION FLUID

Initially fill the reservoir with DEXRON II automatic transmission fluid. Refer to the following table for the amount. DO NOT OVERFILL THE RESERVOIR! Raise and lower the hoist several times and check the fluid level in the reservoir. Add fluid as needed.

Model	Single−Acting	Double−Acting
545	7 Quarts	7 Quarts
645	18 Quarts	7 Quarts

KEEP THE FLUID CLEAN! USE CLEAN CONTAINERS, FUNNELS AND OTHER EQUIPMENT!

With normal use and working conditions the automatic transmission fluid should be changed annually. The breather cap should be cleaned every time the fluid is changed. With heavy use or very dusty working conditions the fluid should be changed more often.

MOUNT BODY

It is recommended that the body be painted before it is mounted on the truck. Place the body in position on the truck with three inches of clearance behind the cab. Use the rivet strips to fill the space between the longbeams and the truck frame. Use three on each side, spaced as shown in Figures 3 and 4 on pages 5 and 6. Weld them to the longbeams. Align the body longbeams carefully with the truck frame. Securely weld the longbeams to the rear hinge brackets and to the upper hoist pivot pads.

On the inside of the longbeams, securely weld the longbeam fillers to the top of the upper hoist pivot pads and to the top flange of the longbeam channels as shown in Figure 11. For Crysteel's Grain Tipper, place the 9 inch square plate between the angle lift bracket and the inside of the longbeam as shown in Figure 12. Securely weld this plate to the longbeam and to the upper hoist pivot pad. Be sure to do this on both sides.

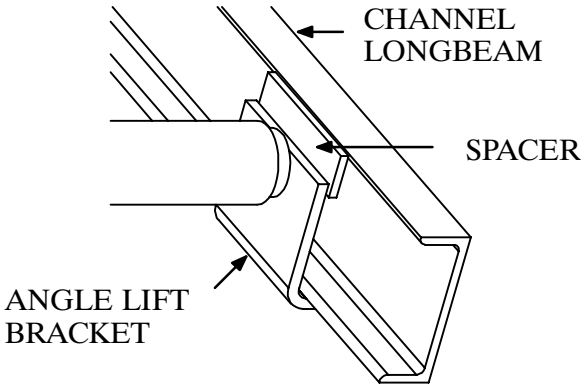

FIG. 11

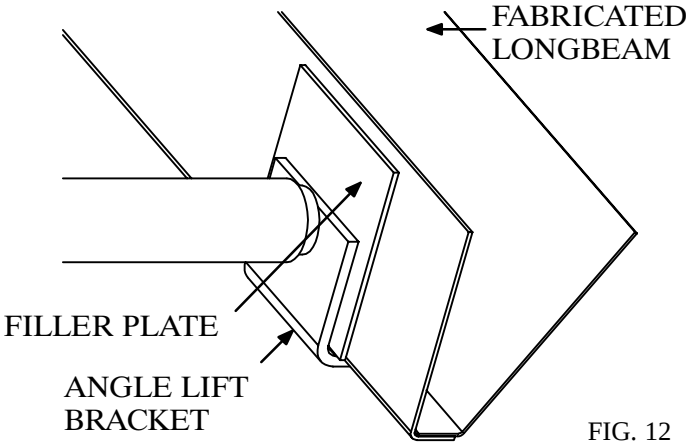

FIG. 12

INSTALL BODY GUIDES

The four body guides supplied with your hoist are of two types. Part number 217503 has an obtuse angle that allows it to match the angle of fabricated longbeams. Position this type as shown in Fig. 12 with wide end down, pushed against the longbeam, and centered over the hoist lower mounting angle. Weld securely to the mounting angles. DO NOT use the other body guides with fabricated longbeams.

Part number 201415 body guide is used with channel type longbeam and has a right angle that allows it to be positioned as shown in Fig. 13. Position this guide 1/4" away from the longbeam, centered over the lower mounting angle. Place the 217503 body guide inside of it as shown so that the flat sides of the guides fit together. Weld number 201415 to the lower mounting angle and 217503 to the longbeam.

There should be NO SIDEPLAY when the truck body is in the lowered position.

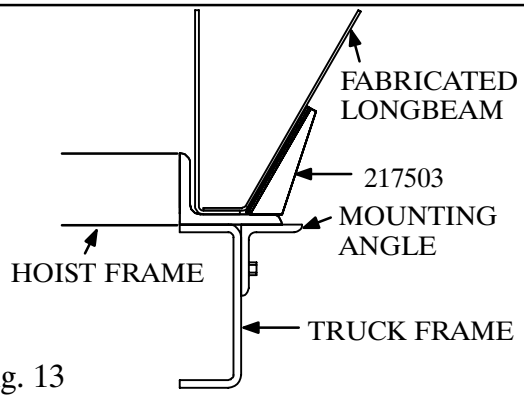

Fig. 13

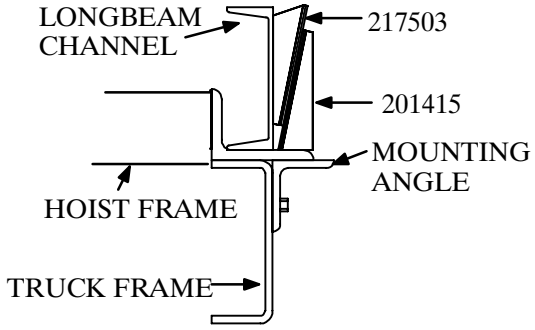

Fig. 14

DO NOT WORK UNDER A RAISED BODY UNLESS THE BODY IS SECURELY BLOCKED OR PROPPED IN THE RAISED POSITION.

INSTALL BODY PROP

The body prop is designed and intended to support an EMPTY truck body in the raised position. Use of the body prop permits service to be performed safely beneath a raised body. It is mounted on the outside of the truck frame on the drivers side.

1. Raise the body to a 30˚ to 35˚ angle and brace it securely before beginning installation.
2. Assemble the prop arm to the prop pivot mount with a 1/4 x 3 roll pin. Clamp the prop pivot mount against the outside of the truck frame just behind the rear axle. Raise the body prop arm to a free standing position. Place the body prop bracket in the prop arm saddle. Reposition if needed to locate the prop bracket on the longbeam. It may be necessary to raise or lower the body to get the best location for the prop pivot mount. Using the prop pivot mount as a guide, mark the location of holes on the truck frame and drill 17/32 inch holes. Assemble the prop pivot mount to the frame using 1/2 x 2 cap screws, and hex lock nuts. Raise the prop arm to a free standing position, place the body prop bracket in the saddle and securely weld the bracket to the longbeam.
3. To operate the body prop, raise the body to the desired height, shut off all power, raise the prop arm to a free standing position. Lower the body slowly until the body prop bracket contacts the prop arm saddle.
4. To place the body prop in the storage position, raise the body to clear the body prop saddle, lower the body prop to the storage position and lower the body.

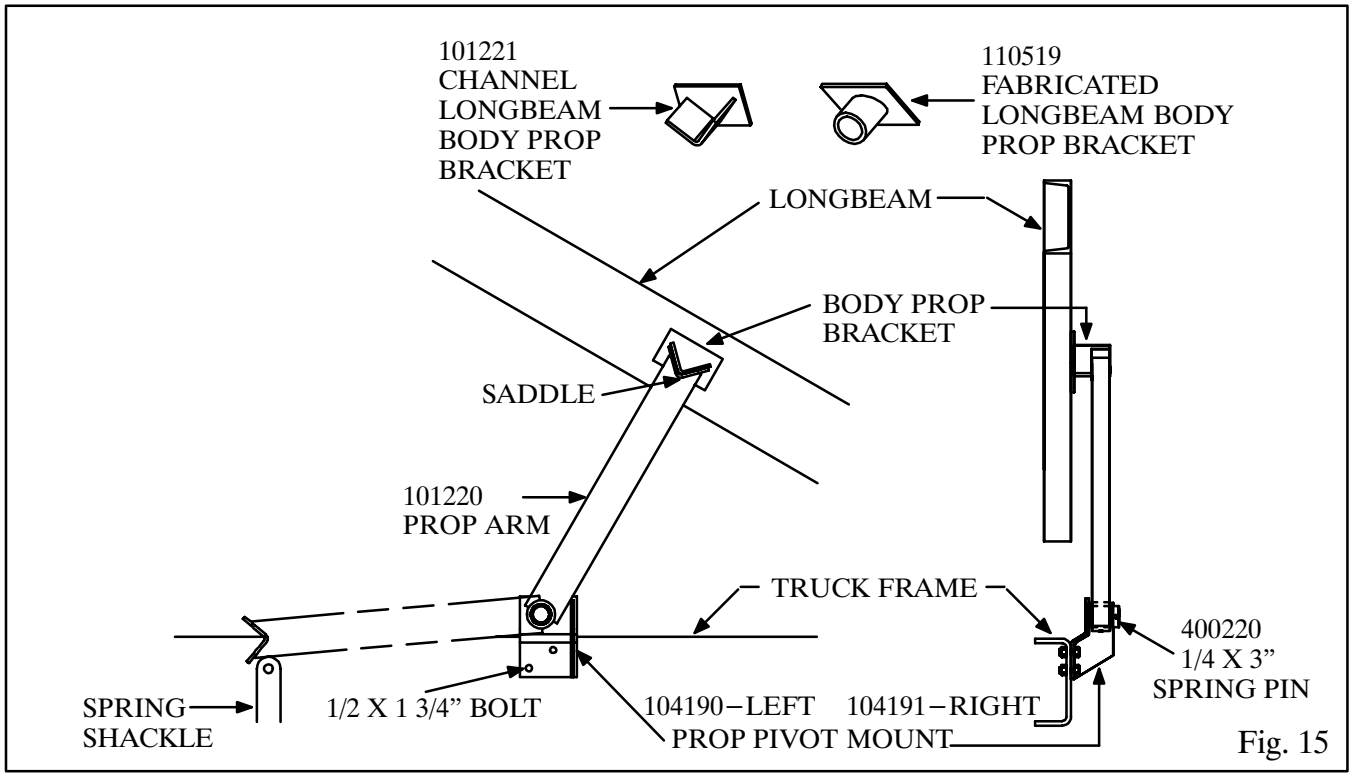

Fig. 15

INSTALL GREASE ZERKS AND LUBRICATE

Install grease zerks in the body props. Lubricate all fittings at regular intervals, at least every 150 cycles or every two months. The grease fittings are located as follows:

A. Lower CrossTube ..... 2 fittings
B. Upper CrossTube ..... 2 fittings
C. Cylinder Pivots ..... 2 fittings
D. Center Hinge ..... 2 fittings
E. Body Prop ..... 1 fitting
F. Rear Hinge ..... 2 fittings

There are very large forces on the bearing surfaces within the hoist frame, especially the center hinge and the cylinder crosshead. Lubricating regularly and generously ensures proper operation and long life.

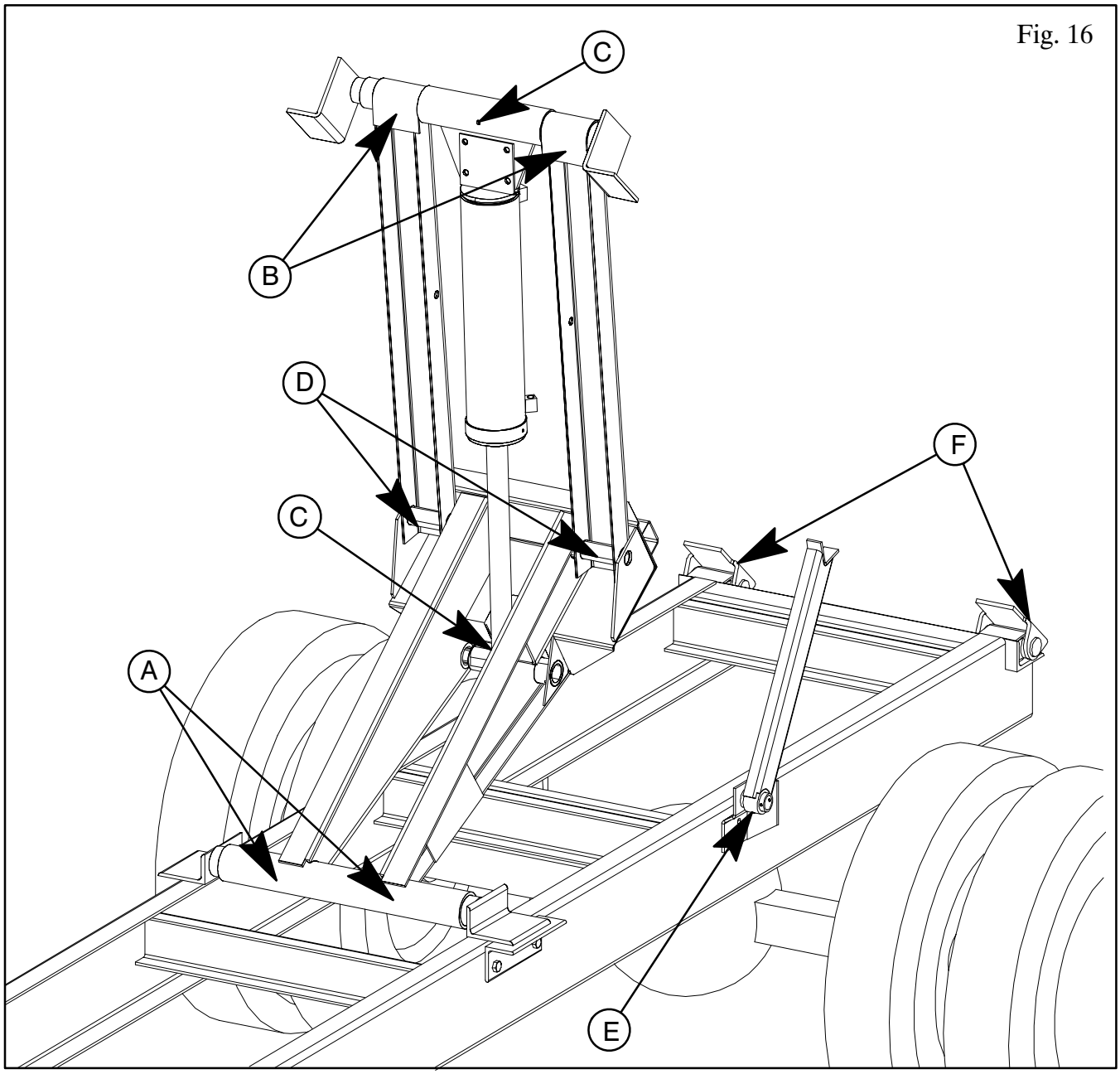

Fig. 16

INSTALL DECALS

Mount decals in the proper places. See Fig. 17 for decal identification and placement.

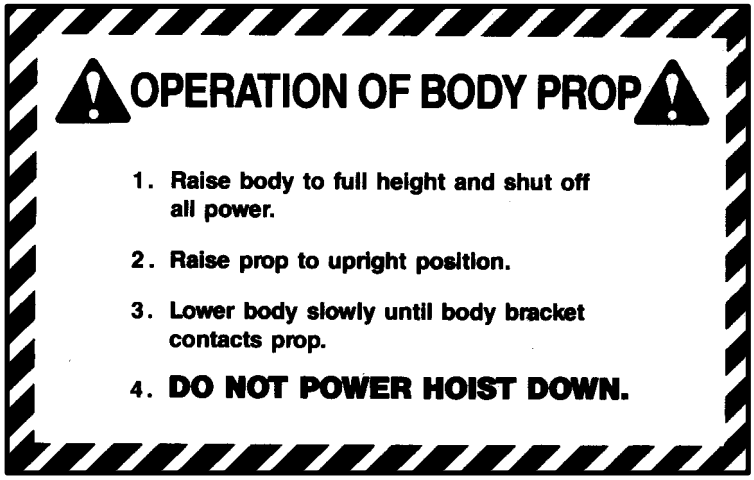

400719–Mount on the body longbeam near the body prop

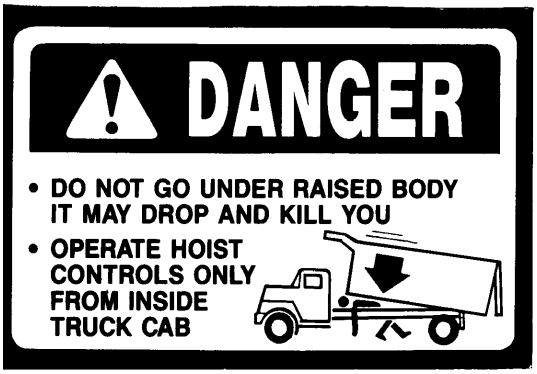

401576–Mount on the outside of the body longbeams near the front of the body (one on each side).

400643–Mount on the longbeam on the drivers side.

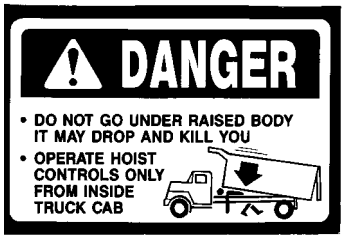

401577–Mount in the cab in a prominent location

400642–Mount in the cab in a prominent location'

400661–Mount on the body prop arm.

Fig. 17

LB545/645 HOIST PARTS

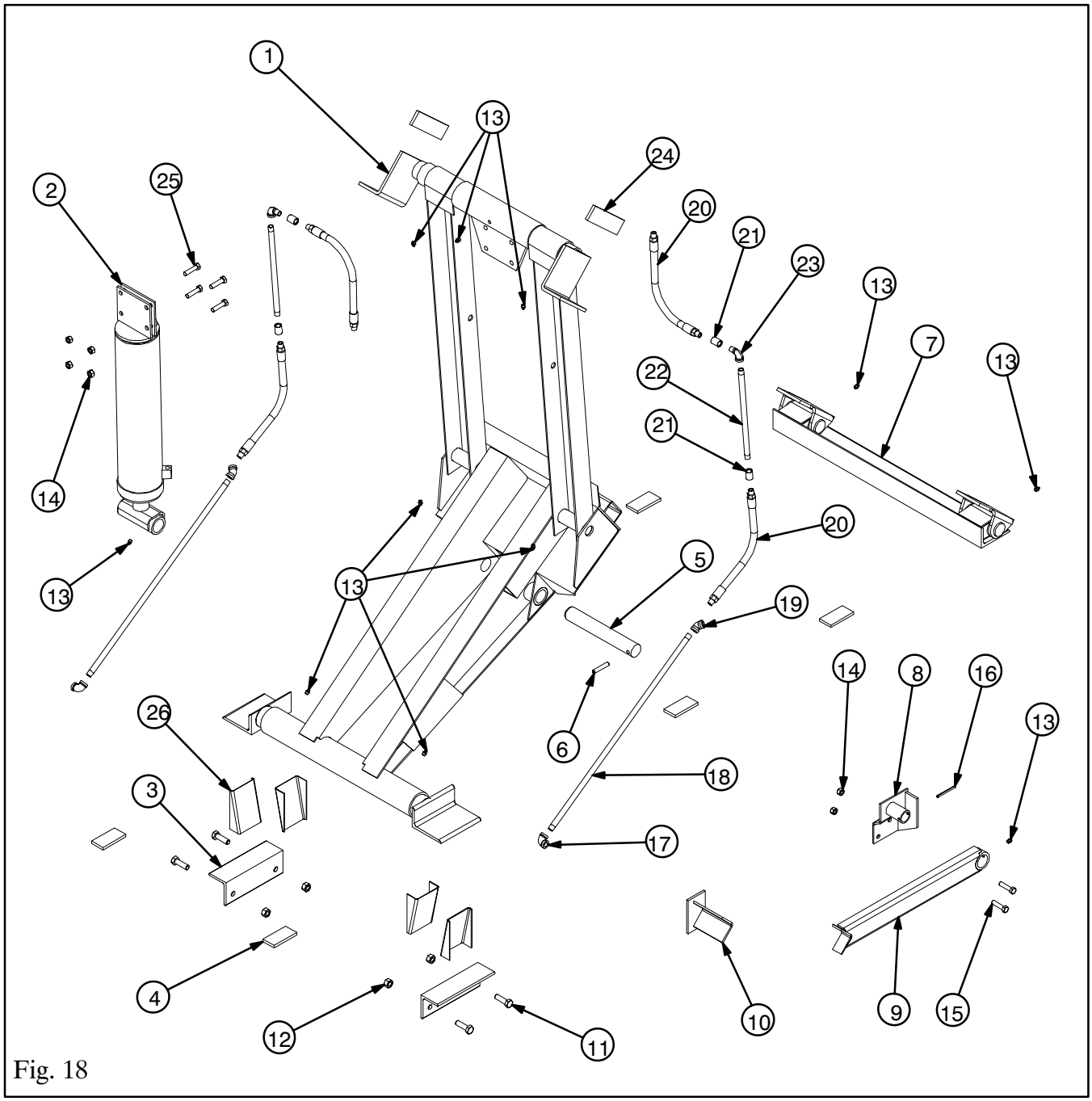

Fig. 18

ITEM	DESCRIPTION	MODEL	PART NO.	QTY.
1.	Assy Hoist Frame	545	100152	1
	Assy Hoist Frame	645	100149	1
2.	Assy Cylinder	545	104235	1
	Assy Cylinder	645	104236	1
3.	Angle Mounting	Both	201422	2
4.	Spacer Longbeam 3/8 x 2 x 4	Both	200892	6
5.	Crosshead Shaft	Both	201158	1
6.	Spirol Pin 7/16 x 2 1/2	Both	400208	1

7.	Assy Rear Hinge	545 & 645	106060	1
8.	Assy Prop Pivot	545 & 645	104190	1
9.	Assy Body Prop	545 & 645	101220	1
10.	Assy Prop Bracket	545 & 645	125259	1
11.	Hex Head Cap Screw 5/8−11 x 2	545 & 645	402374	4
12.	Hex Lock Nut 5/8−11	545 & 645	401582	4
13.	Grease Zerk 1/8 NPT	545 & 645	400103	11
14.	Hex Lock Nut 1/2−13	545 & 645	401316	6
15.	Hex Head Cap Screw 1/2−13 x 2	545 & 645	400105	2
16.	Roll Pin 1/4 x 3	545 & 645	400220	1
17.	Pipe Elbow 3/8 90°	545 & 645	400413	2
18.	Pipe 3/8” x 30”	545 & 645	400567	2
19.	Pipe Elbow 3/8 45°	545 & 645	400414	2
20.	Hose 3/8 NPT x 18” 4000 PSI	545 & 645	400509	4
21.	Pipe Coupling 3/8”	545 & 645	400415	4
22.	Pipe 3/8” x 14”	545 & 645	400565	2
23.	Street Elbow 3/8 90°	545 & 645	400412	2
24.	Longbeam Filler 3/8 x 2 x 6	545 & 645	200900	2
25.	Hex Head Cap Screw 1/2−13 x 1 3/4	545	400104	4
	Hex Head Cap Screw 1/2−13 x 2	645	400105	4
26.	Body Guide	545 & 645	201415	4

LB545/645 CYLINDER PARTS

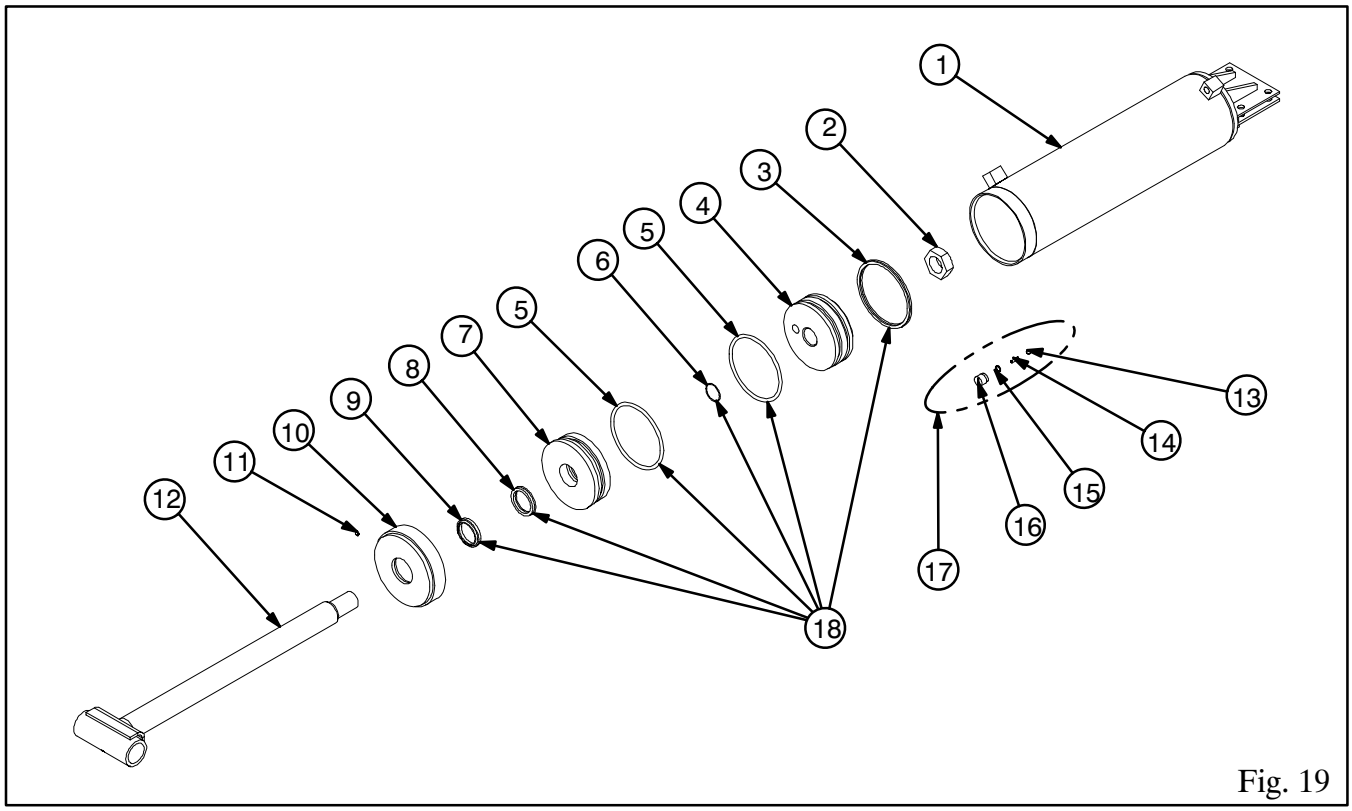

Fig. 19

ITEM	DESCRIPTION	MODEL	PART NO.	QTY.
1.	Assy Cylinder Tube 545	545	104303	1
	Assy Cylinder Tube 645	645	104306	1
2.	Hex Jam Nut 1 1/2−12	545 & 645	401370	1
3.	Poly Seal 5” OD x 1/4 C.S.	545	400252	1
	Poly Seal 6” OD x 1/4 C.S.	645	400257	1
4.	Piston 5”	545	202461	1
	Piston 6”	645	202472	1
5.	O−Ring 4 1/2 ID x .275 C.S.	545	400254	2
	O−Ring 5 1/2 ID x .275 C.S.	645	400258	2
6.	O−Ring 1 1/2 ID x .070 C.S.	545 & 645	400255	1
7.	Head 5”	545	205128	1
	Head 6”	645	205130	1
8.	Poly Seal 2” ID x 1/4 C.S.	545 & 645	400253	1
9.	Wiper 2” ID	545 & 645	400913	1
10.	Assy Cylinder Cap 5” x 2”	545	104293	1
	Assy Cylinder Cap 6” x 2”	645	104298	1
11.	Set Screw 1/4−20 Nylon Tip	545 & 645	400149	1
12.	Assy Cylinder Shaft 545 & 645	545 & 645	104305	1
13.	Steel Ball 3/8 Dia	545 & 645	400013	1
14.	Bypass Valve Pin	545 & 645	400979	1

15.	O−Ring 7/16 ID x .070 C.S.	545 & 645	401017	1
16.	Bypass Valve Body	545 & 645	400978	1
17.	Kit Bypass Valve	545 & 645	105185	1
18.	Kit Seal 5” Universal	545	107960	1
	Kit Seal 6” Universal	645	107962	1

LB545/645 HYDRAULIC PARTS

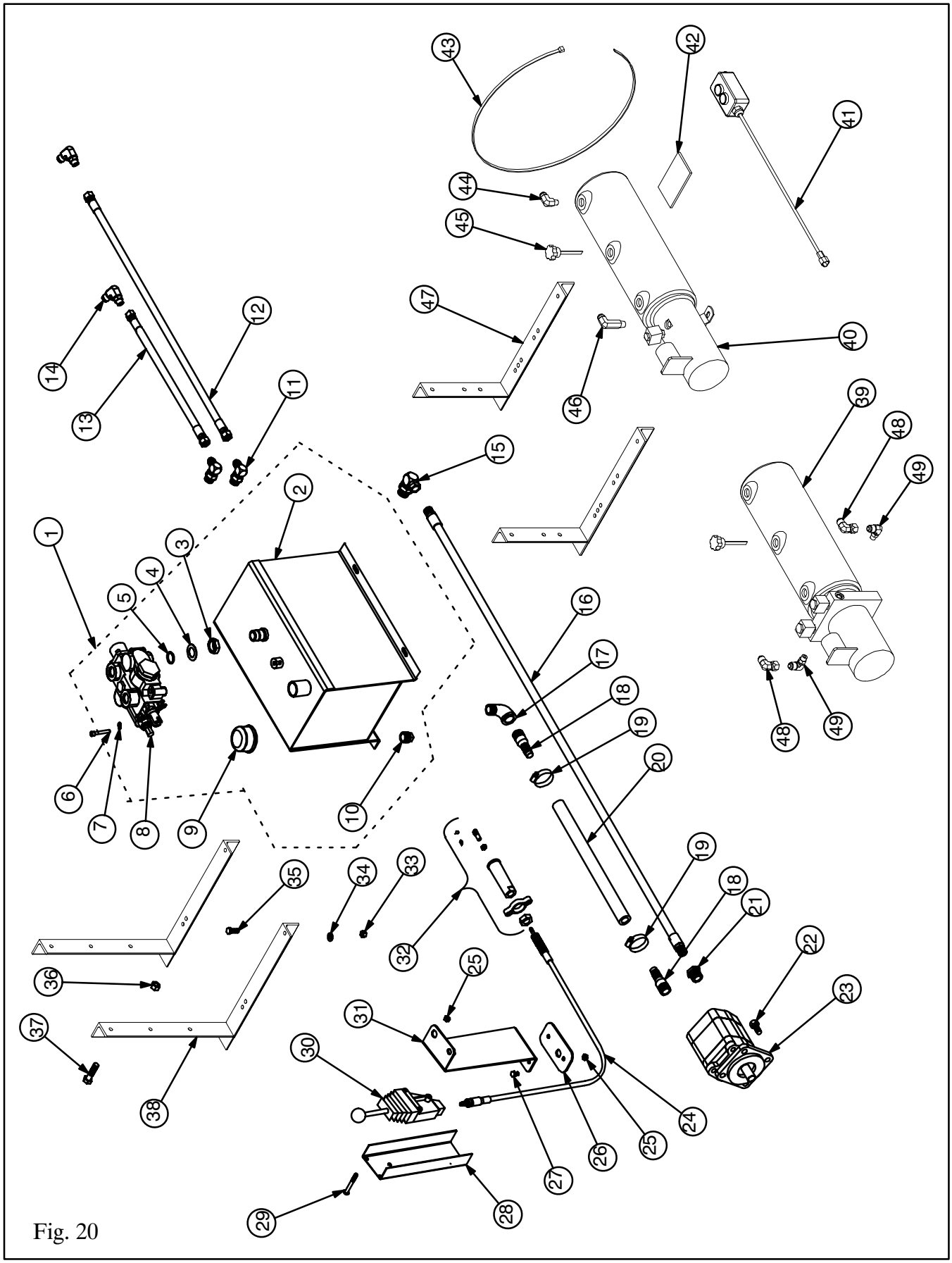

Fig. 20

ITEM	DESCRIPTION	MODEL	PART NO.	QTY.
1.	Reservoir/Valve Assy (Carton)	545 & 645	116651	1
2.	Reservoir Assy	545 & 645	116361	1
3.	Hex Jam Nut 1 1/16−12	545 & 645	402092	1
4.	Cone Washer 1 1/16	545 & 645	402093	1
5.	O−Ring .924 ID x .116 CS	545 & 645	401094	1
6.	Socket Head Cap Screw 5/16−18 x 2	545 & 645	402115	1
7.	Lock Washer 5/16	545 & 645	400165	1
8.	Control Valve 3250 PSI DA	545 & 645	402065	1
9.	Breather Cap	545 & 645	400764	1
10.	Magnetic Pipe Plug	545 & 645	400405	1
11.	Adapter 7/8 ORBM x 3/4 JICM 90°	545 & 645	402486	2
12.	Hose 3/4 JIC x 48” 4000 PSI	545 & 645	402490	1
13.	Hose 3/4 JIC x 42” 4000 PSI	545 & 645	402489	1
14.	Adapter 3/8 NPTM x 3/4 JICM 90°	545 & 645	402789	2
15.	Adapter 1 1/16 ORBM x 1/2 NPTF 90°	545 & 645	401285	1
16.	Hose 1/2 NPT x 72” 3500 PSI	545 & 645	401445	1
17.	Street Elbow 3/4”	545 & 645	402144	1
18.	Hose Barb 3/4 NPT x 3/4	545 & 645	401447	2
19.	Hose Clamp #24 1 1/16−2	545 & 645	401441	2
20.	Suction Hose 3/4 ID x 72”	545 & 645	404911	1
21.	Hex Bushing 3/4 x 1/2	545 & 645	401091	1
22.	Hex Head Cap Screw 1/2−13 x 1 1/4	545 & 645	400153	4
23.	Gear Pump − 6 GPM	545 & 645	400394	1
24.	Control Cable − 96”	545 & 645	402122	1
25.	Hex Lock Nut 5/16−18	545 & 645	401240	5
26.	Clamp Plate − Pedestal	545 & 645	225127	1
27.	Cap Screw 5/16−18 x 1/2	545 & 645	402415	2
28.	Pedestal Cover− Wescon, Tall	545 & 645	223397	1
29.	Machine Screw 5/16−18 x 2 1/2	545 & 645	402154	3
30.	Remote Valve Control, Center Detent	545 & 645	402120	1
31.	Pedestal Bracket − Wescon, Tall	545 & 645	223396	1
32.	Valve Connection Kit	545 & 645	402127	1
33.	Hex Lock Nut 3/8−16	545 & 645	402038	4
34.	Flat Washer 3/8	545 & 645	400164	4
35.	Hex Head Cap Screw 3/8−16 x 1	545 & 645	400121	4
36.	Hex Lock Nut 1/2−13	545 & 645	401316	4
37.	Hex Head Cap Screw 1/2−13 x 2	545 & 645	400105	4
38.	Reservoir Mounting Angle Assy	545 & 645	100511	2

39.	Monarch Pump DA 3250 PSI	545 & 645	405287	1
40.	Monarch Pump SA 3250 PSI	545	405286	1
	Monarch Pump SA 3250 PSI 20 Qt	645	405313	1
41.	Push Button Control – 10’	545 & 645	405289	1
	Push Button Control – 15’	545 & 645	405290	1
42.	Rubber Pad 1/4 x 3 x 5	545 & 645	405319	1
43.	Cable Tie – 33” Black	545 & 645	404956	1
44.	Adapter 1/4 NPTM x 3/4 JICM 90°	545 & 645	402510	1
45.	Breather Cap w/ Dipstick	545 & 645	405384	1
46.	Adapter 3/8 NPTM x 3/4 JICM 90° Extra Long	545 & 645	402509	1
47.	Pump Mounting Angle Assy	545 & 645	100174	2
48.	Adapter 3/4 JICF x 3/4 JICM 90°	545 & 645	403448	2
49.	Adapter 9/16 ORBM x 3/4 JICM 90°	545 & 645	403447	2

CAPACITY FORMULA

The capacity of the LoBoy Model 545 and 645 hoists can be calculated using the following steps.

1. Measure the distance, in inches, from the center of the rear hinge to the center of the body. Call this “A”.
2. Measure the distance, in inches from the center of the rear hinge to the forward crosstube on the hoist. Call this “D”.
3. For Model 545, multiply “D” by 6.51; for Model 645, multiply “D” by 8.83.
4. Divide the result of Step 3 by “A”. This is the capacity in tons of an evenly distributed load and includes the weight of the body.

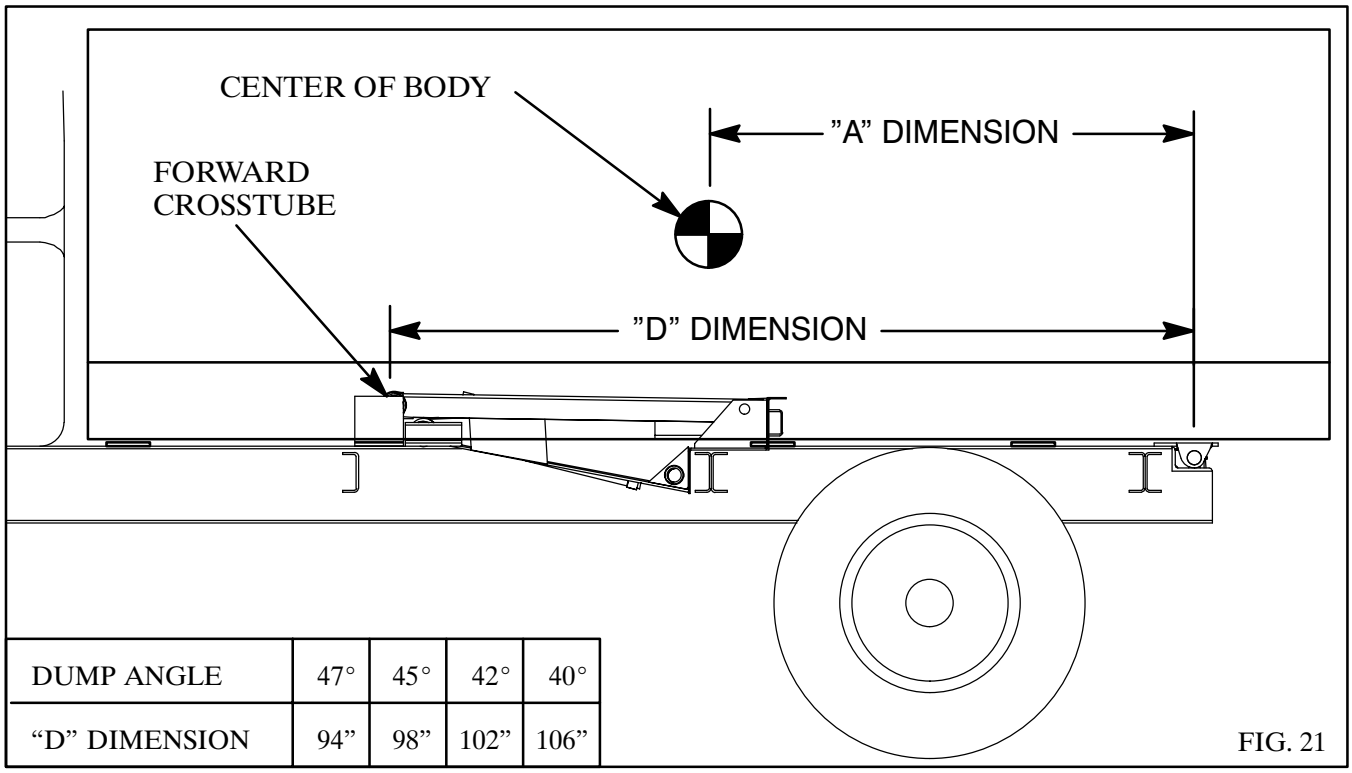

DUMP ANGLE	47°	45°	42°	40°
“D” DIMENSION	94”	98”	102”	106”

FIG. 21

NOTES

SPECIALLY DESIGNED – WITH QUALITY IN MIND

WARRANTY

- Crysteel Manufacturing, Inc. warrants its products for a period of five (5) years from date of purchase.
- This warranty covers our products for defective material and/or workmanship at a rate of 100% for the first (3) years and at a rate of 50% for years (4) and (5).
- This warranty is all encompassing and covers all areas of our product including: Crysteel manufactured product, OEM products purchased by Crysteel, the repair of the warranted product, the replacement of warranted product, the labor to replace the warranted product, and both in and outbound freight for the replacement of the warranted product. This warranty is limited to products supplied under the Crysteel Mfg. name and does not cover distributor modifications. Primer warranty is limited to adherence to metal surfaces only and does not include the inside or understructure of the dump body or hoist.
- We will not assume responsibility for travel, loss of use, or downtime expenses.
- This warranty is void if the product has been obviously abused, or subjected to usage it was not designed for.
- Please contact your Crysteel Distributor for additional details.

! CAUTION !

- **BODY MUST BE BRACED BEFORE SERVICING HOIST OR WORKING IN AREA WITH BODY IN RAISED POSITION**
- **LUBRICATE HOIST GREASE FITTINGS OFTEN – AT LEAST EACH TIME TRUCK IS SERVICED**
- **TRUCK MUST BE LEVEL FOR DUMPING**
- **DO NOT OVERLOAD**

CRYSTEEL MFG, INC.

CRYSTEEL MANUFACTURING, INC.

P.O. Box 178 Hwy 60 East
Lake Crystal, MN 56055

1902 Route 57 South
Fulton, NY 13069

(507) 726–2728 (800) 533–0494